SIGN BOARD : ELEVATION
1:15

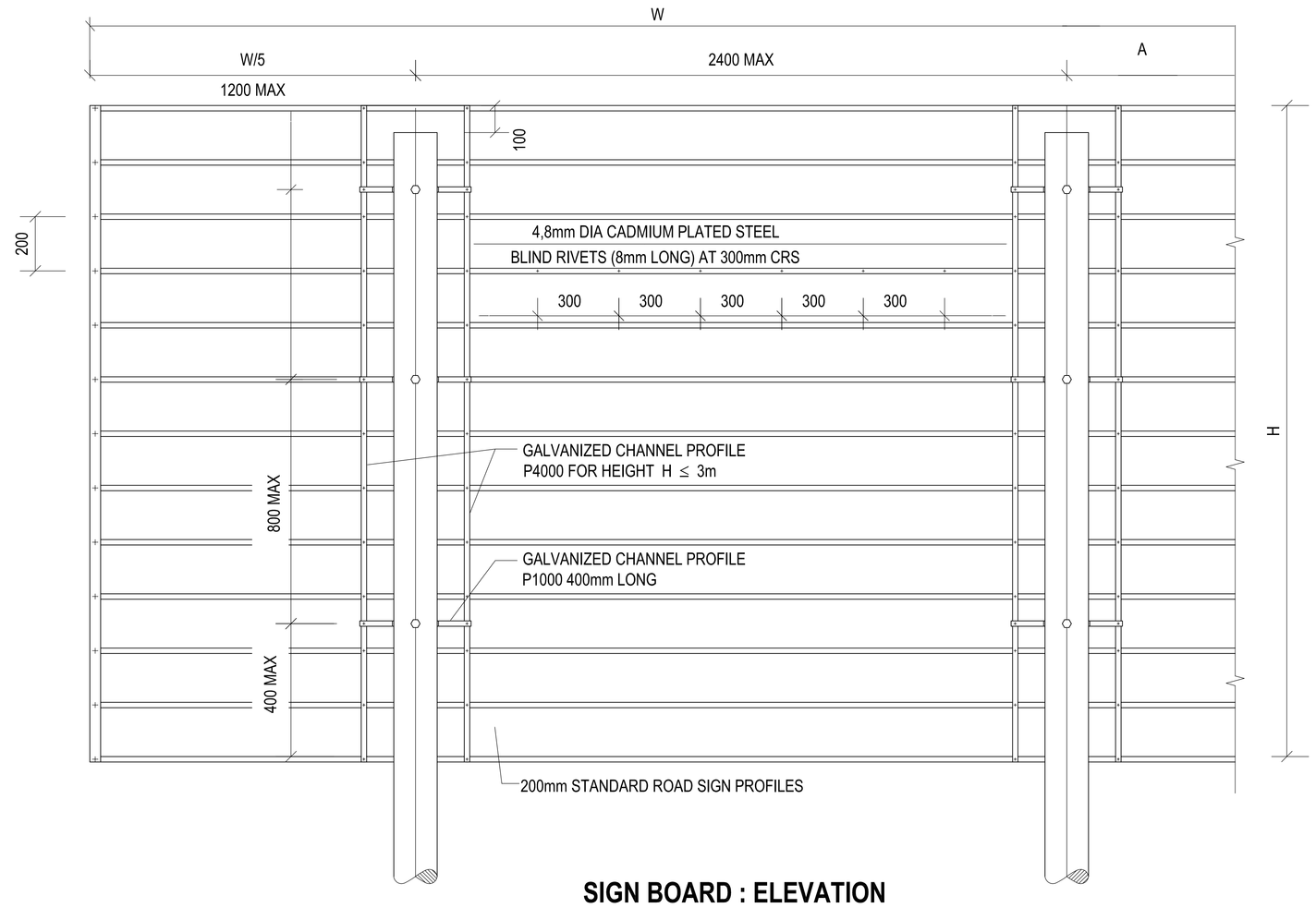

SIGN BOARD : ELEVATION
1:15

ERECTION OF SIGNS

WIDTH OF SIGN W	No. OF SUPPORTS N	DIMENSIONS Y	DIMENSIONS X
1.2m - 4.0m	2	W/5	3W/5
4.0m - 7.2m	3	W/6	W/3

SIGN BOARD	FOUNDATION	FREE STANDING SUPPORT
TYPE 1	D=1,1m DIA=1,2m	3 NO 200mm DIA

FOUNDATION IN SAND OR SOFT CLAY TO BE APPROVED BY THE ENGINEER.

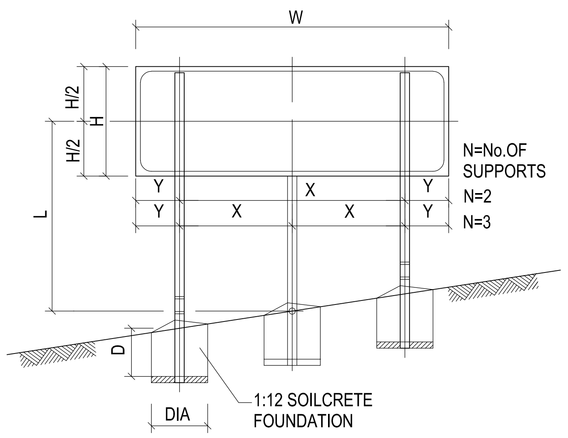

ELEVATION
NOT TO SCALE

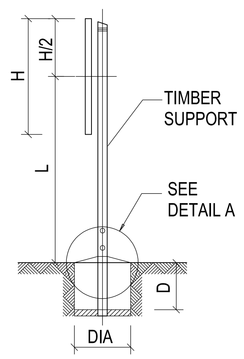

TYPICAL SECTION FREE STANDING SUPPORT
NOT TO SCALE

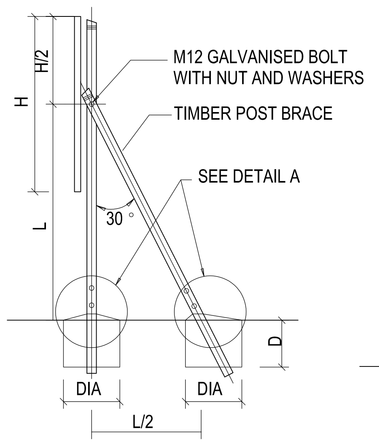

BRACED SUPPORT
NOT TO SCALE

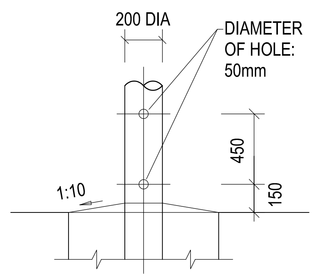

DETAIL A
NOT TO SCALE

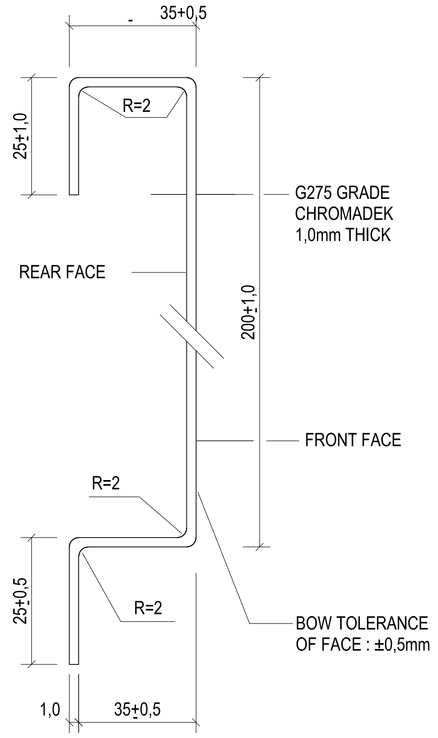

STANDARD ROAD SIGN PROFILES
NOT TO SCALE

ROAD SIGN BOARD

BACKGROUND : WHITE REFLECTORISED CLASS 1.
BORDER : 20mm GREEN REFLECTORISED CLASS 1.
MATERIAL : RETRO-REFLECTIVE MATERIAL TO COMPLY WITH SANS 1519.
REAR SIDE : DARK GREY (SANS 1091: G13)
TEXT : CAPITAL LETTERS, DIN A, MATT-BLACK.
TELEPHONE NUMBER, DIN B MOD, MATT-BLACK.
SUBSTRATE : 1.0mm THICK "ISCOR CHROMADEK" OR SIMILAR.
MANUFACTURING : 200mm STANDARD ROAD SIGN PROFILES TO THE DETAILS ON STANDARD PLANS SP-B-12-4 AND SP-B-12-5.
FLATNESS TOLERANCE OF ASSEMBLED BOARD: 3mm MEASURED UNDER A 1m STRAIGHTEDGE.
LENGTH : ADJUSTED TO SUIT LENGTH OF DESCRIPTION.
SUPPORTS : 2 OR 3 No 200mm TOP END DIAMETER TIMBER POSTS.
ERECTION POSITION : ON SITE AT POSITIONS APPROVED BY THE ENGINEER.
No. REQUIRED : TYPE 1: CONTRACT LIMIT (2 OR AS APPROVED BY THE ENGINEER).
TYPE 2: AFTER MAJOR CENTRES OR APPROX. 50km APART (AS APPROVED BY THE ENGINEER).
REMOVAL : THE ROAD SIGN BOARDS SHALL BE REMOVED BEFORE A TAKING-OVER CERTIFICATE FOR THE ENTIRE WORKS IS ISSUED.

No.	DATE	REVISION	CONSULT. ENG.
V1	21/06/2023	ORIGINAL VERSION	-

CONSTRUCTION RECORD (AS-BUILT)
WORKS CONTRACT ENGINEER
Name :
Prof. Reg.. No. :
Date :
SANRAL PROJECT MANAGER
Name :
Date :

DESIGNED BY
NAME -
Prof. Reg. No. -
CHECKED BY
NAME -
Prof. Reg. No. -
DRAWN BY
NAME -

CONSULTANT APPROVAL
Name : -
Prof. Reg. No. : -
Date : -

HEAD OFFICE
48 Tambotie Avenue
Val de Grace
Pretoria
0184
PO Box 415
Pretoria 0001
South Africa
Tel: (012) 844 8000

SANRAL
SOUTH AFRICAN NATIONAL ROADS AGENCY SOC LTD
Reg No. 1998/03084/06
BUILDING SOUTH AFRICA THROUGH BETTER ROADS

NORTHERN REGION
38 Ida Street
Menlo Park
Pretoria
0081
Private Bag X17
Lynnwood Ridge
0040
Tel: (012) 426 6200

ACCEPTANCE
THIS ACCEPTANCE IS FOR PROCEDURAL AND ADMINISTRATIVE REVIEW PURPOSES ONLY AND DOES NOT ATTRACT LEGAL LIABILITY OR LIABILITY OF ANY KIND FROM WHATSOEVER CAUSE OR HOWEVER ARISING
for the SA NATIONAL ROADS AGENCY SOC LTD.
Date:

PROJECT DESCRIPTION
MSBBR : R531 SECTION 2 - EMERGENCY REPAIR OF DAMAGED STEEL RIBBED PIPE CULVERT AT km 6.9 AND SINKHOLE AT km 11.4

DRAWING DESCRIPTION
ROAD SIGNS
INFORMATION BOARD DETAILS

SCALE : AS SHOWN (A0 SHEET) SHEET 1 OF 1

PROJECT NUMBER	R.531-020-2023/1	
DRAWING LOCATION DATA	START	END
ROUTE	R531	R531
SECTION	2	2
DRAWING km DISTANCE	km 6.90	km 11.40
DRAWING TYPE	ROADS - ANCILLARY	
BRIDGE/STRUCTURE No.	-	
CONSULTANT DRAWING No.	TP1916.32-F01	VER V1
SANRAL DOCUMENT #	-	

DRAWING TP1916.32-F01